AL .563

Work Order ID 106667

September-11-13 11:18:00 AM

106667

Item ID: 646.9910 **Accept** *N900040100* **Setup Start** *NS1*
Revision ID: **Stop** *NS2*
Item Name: Struts

Start Date: 9/11/13 **Start Qty:** 20.00 *20*
Required Date: 9/11/13 **Req'd Qty:** 20.00 *20*
Reference:

Cust Item ID:
Customer:

Approvals: **Process Plan:** MLJ **Date:** 13-09-13 **Tooling:** _____ **Date:** _____
QC: _____ **Date:** _____ **SPC (Y/N):** _____ **Date:** _____

Run Start *NR1*
Stop *NR2*

Sequence ID/ Work Center ID	Operation Description	Set Up/ Run Hours	Tool ID	Tool #	Plan Code	Accept Qty	Reject Qty	Reject Number	Insp. Stamp
Draw Nbr: 646.9900 -- Revision Nbr: N/C									
110		0.00							
110						30	0		
Doosan	**Memo**	0.00							
Doosan Lathe	*** CUT BLANK ON CHOP SAW AT 24.125" LONG***								
	TURN AS PER DWG	SA 13-9-24							
	DWG REV: N/C								
	FOLIO REV: N/A								
	DEBURR								
120	QC2- Inspect parts off machine FAI/FAIB	0.00							
120		SA 13-9-24				30	0		
QC	**Memo**	0.00							
Quality Control									

DQA: _____ Date: _____

NCR: Yes / No

WORK ORDER NON-CONFORMANCE / UPDATE

QA Closed: Date:

Work Order: _____

Part No. _____

NCR No. _____

DISPOSITION

- Rework ☐
- Scrap ☐
- Use-as-is ☐
- Work Order Update ☐

AGAINST DEPARTMENT/PROCESS

- Skid-tube ☐
- Machining ☐
- Thermoforming ☐
- Large Fab ☐
- Crosstube ☐
- Small Fab ☐
- Finishing ☐
- Composite ☐
- Water Jet ☐
- Prod. Eng. Coor. ☐
- Rec/Store/Packaging ☐
- Supplier ☐
- Engineering ☐
- Quality ☐
- Other ☐

Root Cause		Date	Step	Qty	Description of work order update or Non-conformance	Initial Chief Eng	Action Description	Sign & Date	Verification	QC Inspector
Doc/Data										
Equip/Tooling										
Operator										
Material										
Setup										
Other										
Process										
Supplier										
Training										
Unapproved										

FAULT CATEGORY

Landing Gear

- ☐ Bending
- ☐ Centre Not Concentric to O/S
- ☐ Cracks
- ☐ Crushed/Crimped
- ☐ Cuffs
- ☐ Heat Treat
- ☐ Inspection Strip in Tube
- ☐ Ripples in Bend
- ☐ Torque Waves in Extrusion
- ☐ Turning Sequence
- ☐ Wave/Twist in Tube

General

- ☐ Bend
- ☐ BOM/Route
- ☐ Broken/Damaged
- ☐ Burrs
- ☐ Contamination
- ☐ Countersink
- ☐ Cut Too Short
- ☐ Drill Holes
- ☐ Drawing
- ☐ Finish
- ☐ Folio
- ☐ Grain
- ☐ Hardware
- ☐ Inspection Incomplete
- ☐ Instructions Incomplete/Unclear
- ☐ Maintenance
- ☐ Mislabeled
- ☐ Misread
- ☐ Offset
- ☐ Out of Calibration
- ☐ Out of Sequence
- ☐ Outside Dimensions
- ☐ Ovalized
- ☐ Over/Under tolerance
- ☐ Part Incorrect
- ☐ Part Lost/Missing
- ☐ Part Moved
- ☐ Positioned Wrong
- ☐ Power Loss/Surge
- ☐ Pressure/Forced
- ☐ Temperature/Cure
- ☐ Weld
- ☐ Wrong Stock Pulled
- ☐ Other

_____

_____

_____

Item ID: 646.9910 **Accept** *N900040100* **Setup Start** *NS1*
Revision ID: **Stop** *NS2*
Item Name: Struts

Start Date: 9/11/13 **Start Qty:** 20.00 *20*
Required Date: 9/11/13 **Req'd Qty:** 20.00 *20*
Reference:

Cust Item ID:
Customer:

Run Start *NR1*
Stop *NR2*

Approvals: **Process Plan:** _____ **Date:** _____ **Tooling:** _____ **Date:** _____
QC: _____ **Date:** _____ **SPC (Y/N):** _____ **Date:** _____

Sequence ID/ Work Center ID	Operation Description	Set Up/ Run Hours	Tool ID	Tool #	Plan Code	Accept Qty	Reject Qty	Reject Number	Insp. Stamp
170	QC8- Inspect parts - second check	0.00	CK 13/09/25			30	0		
170									
QC	**Memo**	0.00							
Quality Control									
180		0.00							
180	PURCHASING					CL 13/09/27 30			
Outsource4	**Memo**	0.00							
Outsource process - Anodize	Issue P/O to ATG : 21510								
	1- Black Anodize as per Dwg 646.9900								
	2- PRIME AS PER DWG, SEE NOTE #2								
	Certification of Comformity is required								
190	Receive & Inspect for Damage & Mat'l Certs	0.00							
190									
Packaging	**Memo**	0.00							
Packaging	Ensure certificate of conformity is attached								

13/10/22 (30)

DQA: _____ Date: _____

NCR: Yes / No

WORK ORDER NON-CONFORMANCE / UPDATE

QA Closed: Date:

Work Order: _____

Part No. _____

NCR No. _____

DISPOSITION

- Rework ☐
- Scrap ☐
- Use-as-is ☐
- Work Order Update ☐

AGAINST DEPARTMENT/PROCESS

- Skid-tube ☐
- Machining ☐
- Thermoforming ☐
- Large Fab ☐
- Crosstube ☐
- Small Fab ☐
- Finishing ☐
- Composite ☐
- Water Jet ☐
- Prod. Eng. Coor. ☐
- Rec/Store/Packaging ☐
- Supplier ☐
- Engineering ☐
- Quality ☐
- Other ☐

Root Cause		Date	Step	Qty	Description of work order update or Non-conformance	Initial Chief Eng	Action Description	Sign & Date	Verification	QC Inspector
Doc/Data	☐									
Equip/Tooling	☐									
Operator	☐									
Material	☐									
Setup	☐									
Other	☐									
Process	☐									
Supplier	☐									
Training	☐									
Unapproved	☐									

FAULT CATEGORY

Landing Gear

- ☐ Bending
- ☐ Centre Not Concentric to O/S
- ☐ Cracks
- ☐ Crushed/Crimped
- ☐ Cuffs
- ☐ Heat Treat
- ☐ Inspection Strip in Tube
- ☐ Ripples in Bend
- ☐ Torque Waves in Extrusion
- ☐ Turning Sequence
- ☐ Wave/Twist in Tube

General

- ☐ Bend
- ☐ BOM/Route
- ☐ Broken/Damaged
- ☐ Burrs
- ☐ Contamination
- ☐ Countersink
- ☐ Cut Too Short
- ☐ Drill Holes
- ☐ Drawing
- ☐ Finish
- ☐ Folio
- ☐ Grain
- ☐ Hardware
- ☐ Inspection Incomplete
- ☐ Instructions Incomplete/Unclear
- ☐ Maintenance
- ☐ Mislabeled
- ☐ Misread
- ☐ Offset
- ☐ Out of Calibration
- ☐ Out of Sequence
- ☐ Outside Dimensions
- ☐ Ovalized
- ☐ Over/Under tolerance
- ☐ Part Incorrect
- ☐ Part Lost/Missing
- ☐ Part Moved
- ☐ Positioned Wrong
- ☐ Power Loss/Surge
- ☐ Pressure/Forced
- ☐ Temperature/Cure
- ☐ Weld
- ☐ Wrong Stock Pulled
- ☐ Other

_____

_____

_____

Work Order ID 106667

September-11-13 11:18:00 AM

106667

Item ID: 646.9910 **Accept** *N900040100* **Setup Start** *NS1*

Revision ID: **Stop** *NS2*

Item Name: Struts

Start Date: 9/11/13 **Start Qty:** 20.00 *20*

Required Date: 9/11/13 **Req'd Qty:** 20.00 *20*

Reference:

Cust Item ID:

Customer:

Run Start *NR1*

Stop *NR2*

Approvals: **Process Plan:** _____ **Date:** _____ **Tooling:** _____ **Date:** _____

QC: _____ **Date:** _____ **SPC (Y/N):** _____ **Date:** _____

Sequence ID/ Work Center ID	Operation Description	Set Up/ Run Hours	Tool ID	Tool #	Plan Code	Accept Qty	Reject Qty	Reject Number	Insp. Stamp
200	QC5- Inspect part completeness to step on W/O	0.00							
200						30			
QC	**Memo**	0.00							
Quality Control									

Shp 13 10 29

210	Identify as per dwg & Stock Location: ST420	0.00							
210						30			DAS 33 9-89 13-10-25
Packaging	**Memo**	0.00							
Packaging	***IDENTIFY AS PER APICAL MPP-120 BY STAMPING P# AND REV***								

220	QC21- Final Inspection - Work Order Release	0.00							
220						RM 13/10/29			
QC	**Memo**	0.00							
Quality Control									

MF 13-10-28

DQA: _____ Date: _____

NCR: Yes / No

WORK ORDER NON-CONFORMANCE / UPDATE

QA Closed: Date:

Work Order: _____

Part No. _____

NCR No. _____

DISPOSITION

- Rework ☐
- Scrap ☐
- Use-as-is ☐
- Work Order Update ☐

AGAINST DEPARTMENT/PROCESS

- Skid-tube ☐
- Machining ☐
- Thermoforming ☐
- Large Fab ☐
- Crosstube ☐
- Small Fab ☐
- Finishing ☐
- Composite ☐
- Water Jet ☐
- Prod. Eng. Coor. ☐
- Rec/Store/Packaging ☐
- Supplier ☐
- Engineering ☐
- Quality ☐
- Other ☐

Root Cause		Date	Step	Qty	Description of work order update or Non-conformance	Initial Chief Eng	Action Description	Sign & Date	Verification	QC Inspector
Doc/Data	☐									
Equip/Tooling	☐									
Operator	☐									
Material	☐									
Setup	☐									
Other	☐									
Process	☐									
Supplier	☐									
Training	☐									
Unapproved	☐									

FAULT CATEGORY

Landing Gear

- ☐ Bending
- ☐ Centre Not Concentric to O/S
- ☐ Cracks
- ☐ Crushed/Crimped
- ☐ Cuffs
- ☐ Heat Treat
- ☐ Inspection Strip in Tube
- ☐ Ripples in Bend
- ☐ Torque Waves in Extrusion
- ☐ Turning Sequence
- ☐ Wave/Twist in Tube

General

- ☐ Bend
- ☐ BOM/Route
- ☐ Broken/Damaged
- ☐ Burrs
- ☐ Contamination
- ☐ Countersink
- ☐ Cut Too Short
- ☐ Drill Holes
- ☐ Drawing
- ☐ Finish
- ☐ Folio
- ☐ Grain
- ☐ Hardware
- ☐ Inspection Incomplete
- ☐ Instructions Incomplete/Unclear
- ☐ Maintenance
- ☐ Mislabeled
- ☐ Misread
- ☐ Offset
- ☐ Out of Calibration
- ☐ Out of Sequence
- ☐ Outside Dimensions
- ☐ Ovalized
- ☐ Over/Under tolerance
- ☐ Part Incorrect
- ☐ Part Lost/Missing
- ☐ Part Moved
- ☐ Positioned Wrong
- ☐ Power Loss/Surge
- ☐ Pressure/Forced
- ☐ Temperature/Cure
- ☐ Weld
- ☐ Wrong Stock Pulled
- ☐ Other

_____

_____

_____

Picklist Print

September-11-13 11:17:59 AM

Work Order ID: 106667

Parent Item: 646.9910

Parent Item Name: Struts

Start Date: 9/11/13 **Required Date:** 9/11/13

Start Qty: 20.00 **Required Qty:** 20.00

Comments: IPP REV:A NEW ISSUE 12-09-19 JLM VERIFIED BY:DD

Component Item ID/ Item Name	Replacement Item ID	Mfg/ Purch	Bin Item	Primary Location	Last Location	Route Seq ID	Unit of Measure	Qty on Hand	Qty per Kit	Total Qty	Qty Issued	Date Issued	Status
M6061T6R0.563 6061-T6 ROUND BAR .563		Purchased	No				f	376.3900		**44.210526**	SL	13-9-24	

Location	Loc Qty	Loc Code	
MAT012	376.39		
123218	5		
123294	25.6		
123483	29.4		
124029	16.39		
m126852	300		60.65 RT

DQA: _____ Date: _____

NCR: Yes / No

WORK ORDER NON-CONFORMANCE / UPDATE

QA Closed: Date:

Work Order: _____

Part No. _____

NCR No. _____

DISPOSITION

- Rework ☐
- Scrap ☐
- Use-as-is ☐
- Work Order Update ☐

AGAINST DEPARTMENT/PROCESS

- Skid-tube ☐
- Machining ☐
- Thermoforming ☐
- Large Fab ☐
- Crosstube ☐
- Small Fab ☐
- Finishing ☐
- Composite ☐
- Water Jet ☐
- Prod. Eng. Coor. ☐
- Rec/Store/Packaging ☐
- Supplier ☐
- Engineering ☐
- Quality ☐
- Other ☐

Root Cause		Date	Step	Qty	Description of work order update or Non-conformance	Initial Chief Eng	Action Description	Sign & Date	Verification	QC Inspector
Doc/Data	☐									
Equip/Tooling	☐									
Operator	☐									
Material	☐									
Setup	☐									
Other	☐									
Process	☐									
Supplier	☐									
Training	☐									
Unapproved	☐									

FAULT CATEGORY

Landing Gear

- ☐ Bending
- ☐ Centre Not Concentric to O/S
- ☐ Cracks
- ☐ Crushed/Crimped
- ☐ Cuffs
- ☐ Heat Treat
- ☐ Inspection Strip in Tube
- ☐ Ripples in Bend
- ☐ Torque Waves in Extrusion
- ☐ Turning Sequence
- ☐ Wave/Twist in Tube

General

- ☐ Bend
- ☐ BOM/Route
- ☐ Broken/Damaged
- ☐ Burrs
- ☐ Contamination
- ☐ Countersink
- ☐ Cut Too Short
- ☐ Drill Holes
- ☐ Drawing
- ☐ Finish
- ☐ Folio
- ☐ Grain
- ☐ Hardware
- ☐ Inspection Incomplete
- ☐ Instructions Incomplete/Unclear
- ☐ Maintenance
- ☐ Mislabeled
- ☐ Misread
- ☐ Offset
- ☐ Out of Calibration
- ☐ Out of Sequence
- ☐ Outside Dimensions
- ☐ Ovalized
- ☐ Over/Under tolerance
- ☐ Part Incorrect
- ☐ Part Lost/Missing
- ☐ Part Moved
- ☐ Positioned Wrong
- ☐ Power Loss/Surge
- ☐ Pressure/Forced
- ☐ Temperature/Cure
- ☐ Weld
- ☐ Wrong Stock Pulled
- ☐ Other

_____

_____

_____

DART AEROSPACE LTD	Work Order:	106667
Description:	Part Number:	
Inspection Dwg: Rev:		Page 1 of 1

FIRST ARTICLE INSPECTION CHECKLIST

Drawing Dimension	Tolerance	Actual Dimension	Accept	Reject	Method of Inspection	Comments
24.00	± .03	24.006	✓			
45°	± .5°	43°	✓			
Ø.201	+.006/-.001	Ø.201	✓			
.19	± .010	.19	✓			
.275	± .010	.275	✓			
.563	± .010	.563	✓			

Measured by:	SA
Date:	3-5-24

Audited by:	ok
Date:	13/09/25

Preliminary Approval:	
Date:	

Rev	Date	Change	Revised by	Approved
E	10.04.14	Added preliminary approval	KJ	

10.04.15

APICAL INDUSTRIES, INC.

ENGINEERING CHANGE NOTICE NO. 03728 | SHEET 1 OF 1

DWG NO. 646.9900	REV: N/C	PREPARED BY B. PETERS	DATE: 12/05/12	EFFECT ON DWG ☐ INC. ☒ UNINC.

DWG TITLE: STRUT

APPROVED BY: ENGR	MFG	QC	EFF: NEXT ORDER

TRANSACTION CODES (TC): A-ADD C-CREATE R-REVISE D-DELETE

REASON: REVISED LENGTH TOLERANCE AND CRITICAL DIMENSIONS.

ECR: D-12-014

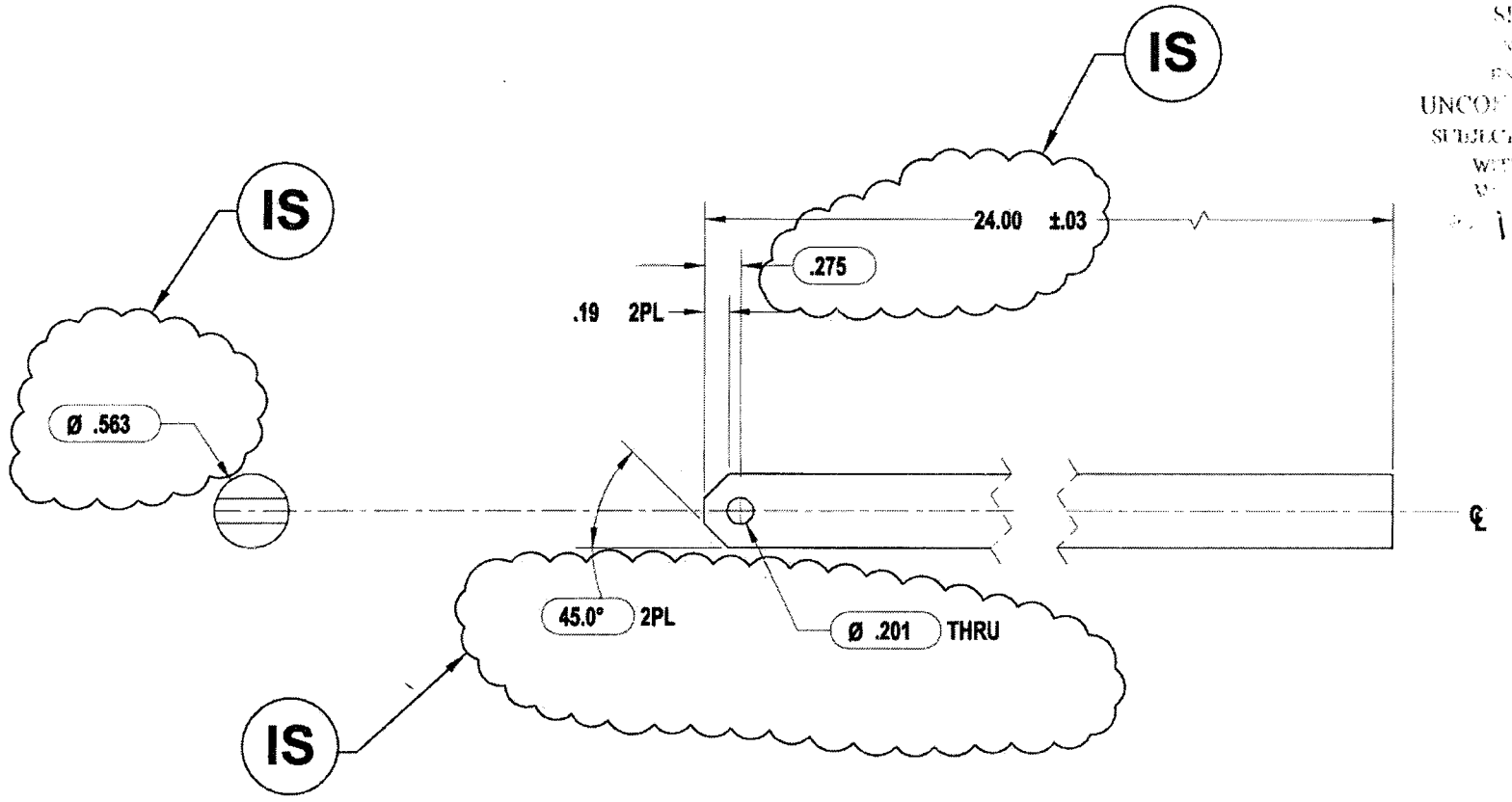

106667 MCJ
13-09-13

SHEET 1 IS:

DOCUMENTS EFFECTED: ☐ RFMS ☐ MDL ☐ INSTALL INSTRUC ☐ ICA ☐ BOM	CHANGE CATEGORY ☐ MAJOR ☒ MINOR	DER REVIEW REQUIRED ☐ YES ☒ NO

106667

THE INFORMATION CONTAINED IN THIS DRAWING IS THE SOLE PROPERTY OF APICAL INDUSTRIES. ANY REPRODUCTION IN PART OR WHOLE WITHOUT THE WRITTEN PERMISSION OF APICAL INDUSTRIES IS PROHIBITED

REVISIONS			
REV	DESCRIPTION	DATE	APPROVED
	LAST PROTOTYPE REVISION PR1		N/C
NC	FIRM RELEASE	04/07/09	P. BRAVO

NOTES:

1. MATERIAL: 6061-T6 ALUMINUM BAR IAW AMS-QQ-A-250/11
2. FINISH: HARD ANODIZE IAW MIL-A-8625 TYPE III, CLASS 2, COLOR BLACK
   CARDINAL 4860-50 PRETREATMENT PRIMER
   PRIME IAW MIL-P-23377J TYPE I CLASS N
3. DEBURR AND BREAK ALL SHARP EDGES
4. IDENTIFY IAW MPP-120

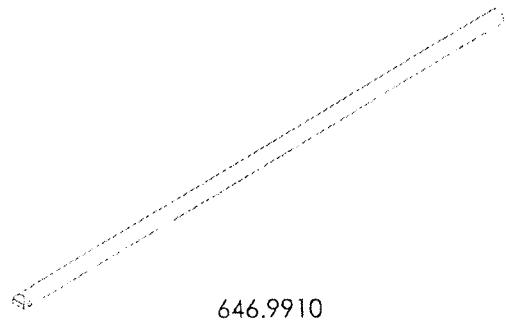

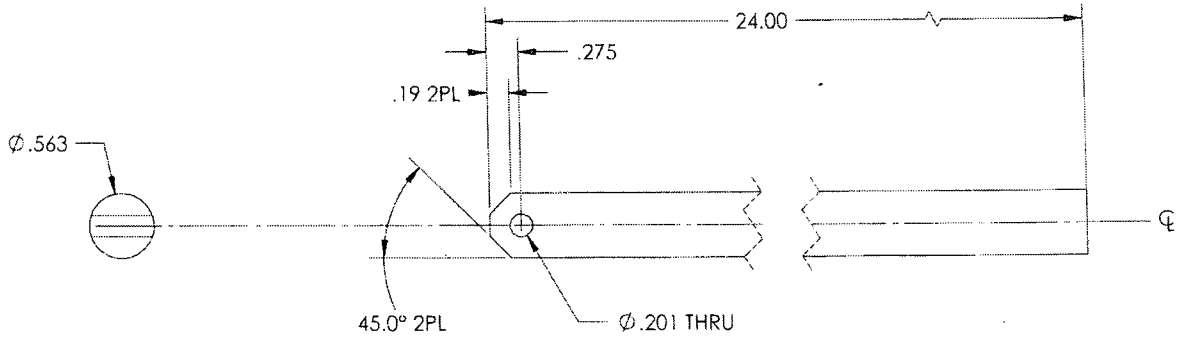

QTY	PART #	DESCRIPTION	MAT'L	SPEC.
	646.9910	STRUT	△1	△2

PARTS LIST

NEXT ASSY (S): 646.9500

ORIGINAL DATE: 04-07-09
DRAWN BY: S. HUEY
CHECKED: P. BRAVO
DRAWING APPROVAL: P. BRAVO 04-07-09
CONTRACT No.

UNLESS OTHERWISE SPECIFIED DIMENSIONS ARE IN INCHES TOLERANCES ARE: 2 PLACE DECIMALS ±.01 3 PLACE DECIMALS ±.005 ANGLES ± 0°

APICAL INDUSTRIES
2608 TEMPLE HEIGHTS DR.
OCEANSIDE, CA 92056-3512 (760)724-5300

STRUT

SIZE B | CAGE CODE 07MZ6 | DWG NO 646.9900 | REV N/C

SCALE NONE | SHEET 1 OF 1

A.T.G. Industries Inc.
731, rue Industrielle Rd.
PLATING DEPARTMENT
Rockland, On K4K 1T2
Canada
Ph: (613) 446-4544
Fax: (613) 446-4556

Pack List

Number: 62694 Date: 21-Oct-13

To

DART AEROSPACE LTD
1270 ABERDEEN ST.
HAWKESBURY, ON K6A 1K7
Canada

Ph: 613-632-5200 Fax: 613-632-1185

Ship To

DART AEROSPACE LTD
1270 ABERDEEN ST.
HAWKESBURY, ON K6A 1K7
Canada

Ph: 613-632-5200 Fax: 613-632-1185

Terms	Ship Via

Quantity	Description
1 lot	Part: ASST Rev: 2 PCS 646.2910 (48.00) 4 PCS 646.3110 (10.65) 6 PCS 646.3811 (6.55) 35 PCS 646.9910 (13.40) 30 32 PCS 647.2010 (11.90) 2 PCS D4821-1 (50.25) 7 PCS D4823-1 (11.15) 2 PCS D4824-1 (13.40) HARD ANODIZE BLACK MIL-A-8625 TYPE III CLASS 2 PRIME MIL-P-23377J TYPE I CLASS N PRICE IS PER PIECE Job: 20130656 PO: 21510 Line:

Certificate of Conformance

A.T.G. Industries certifies that all items in this shipment are in conformance with all requirements, specifications and drawings referenced in the purchase order.

ISO 9001 : 2008 REGISTERED
ATG SALES-2010 TERMS APPLY

DATE : 21/10/13

CERTIFIED SIGNATURE : _____

RECEIVER SIGNATURE : _____